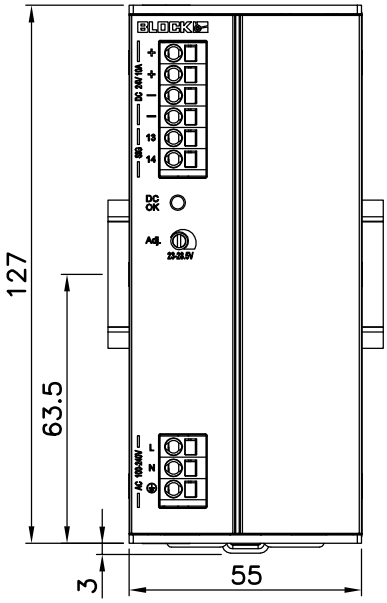
127
63.5
3
55

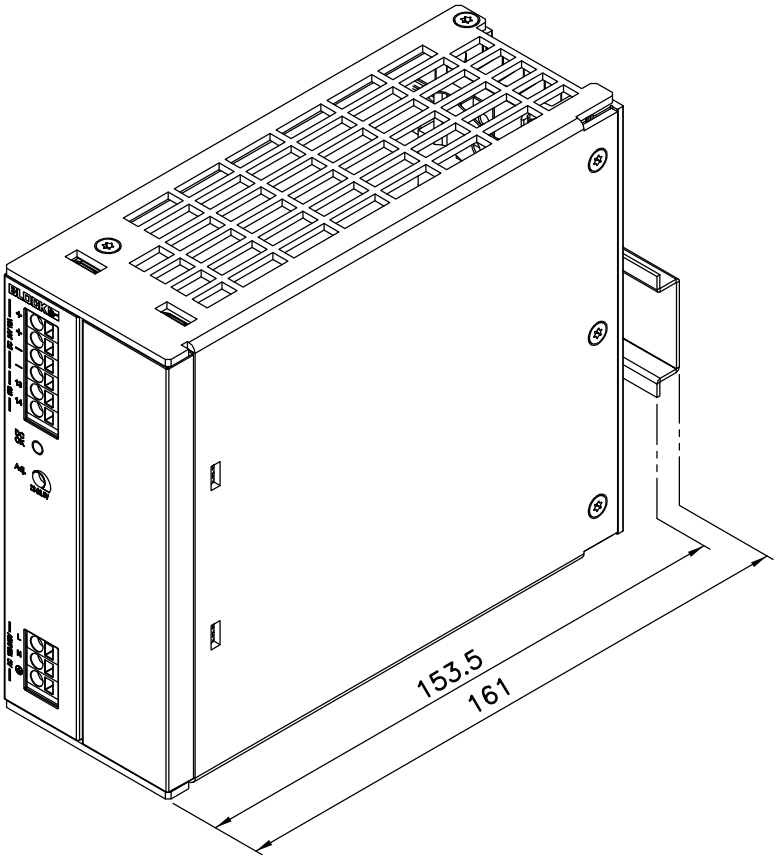
153.5
161